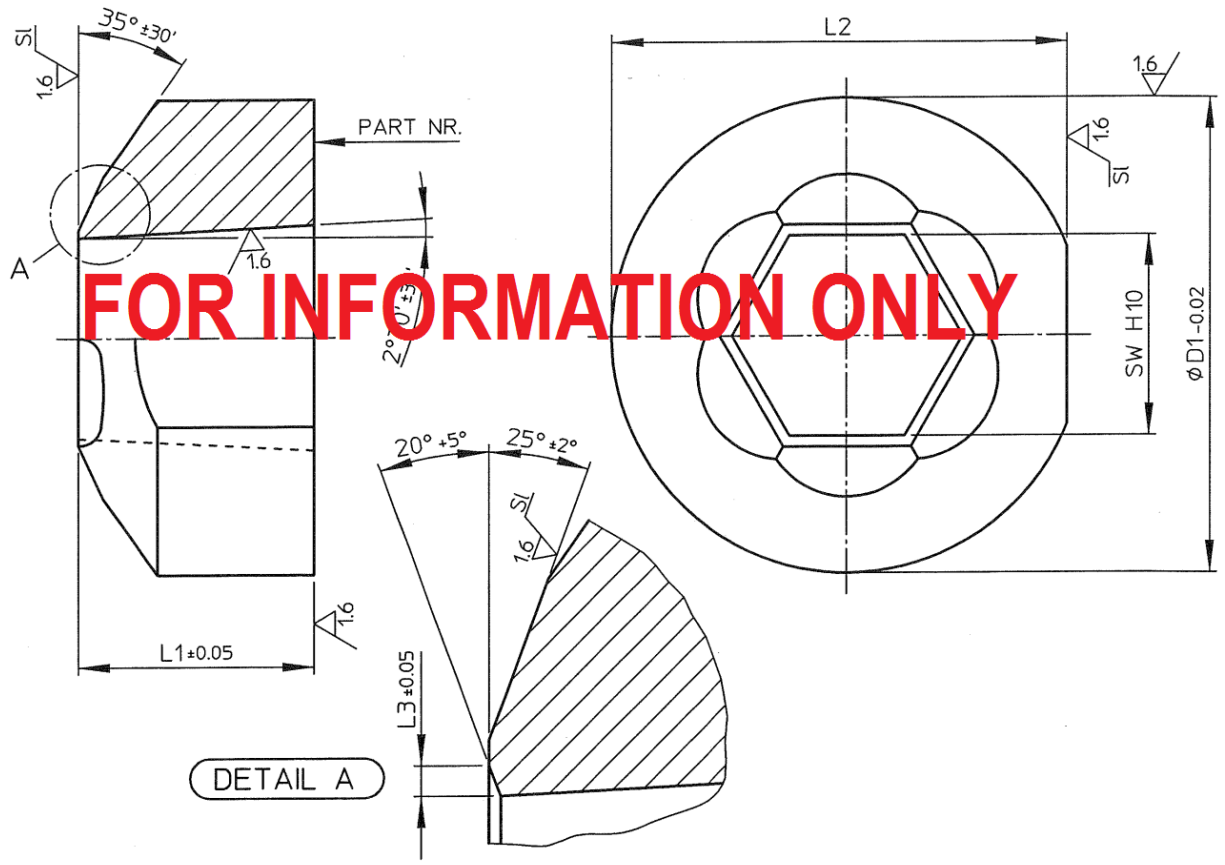

FOR INFORMATION ONLY

PART NR.	SW	D1	L1	L2	L3	PROD.	ART. NR.	ITEM NR.
190547.93	37.80	76.30	35.00	76.30	0.35	1" UN		9190547.4.00 /93
190547.94	33.10	63.60	34.92	63.20	0.35	7/8" UN		9190547.4.00 /94
190547.95	28.40	63.60	34.92	63.20	0.30	3/4" UN		9190547.4.00 /95
190547.96	23.70	50.88	28.45	50.50	0.30	5/8" UN		9190547.4.00 /96
190547.97	20.50	44.53	22.10	44.10	0.30	9/16" UN		9190547.4.00 /97
190547.98	18.90	44.53	22.10	44.10	0.25	1/2" UN		9190547.4.00 /98
190547.99	16.77	31.83	16.00	31.40	0.25	M10	13.3170	9190547.4.00 /99

Machine:	Afm.:	Bew.:	Gez.:
	Mat.: S 6-5-2 1.3343	3.2	Dat.: 91-05-21
			Get.: GL
1	Beh.: HARDENED-GEHARTET-TREMPE 60-62 Rc COATING: TiC 3.5-4.5 µm / TiN 2-3 µm	1 Ra = 10^{-6} m CLA	Form.:

Reproduction, distribution and utilization of this document as well as the communication of its contents to others without express authorization is prohibited. Offenders will be held liable for the payment of damages. All rights reserved in the event of the grant of a patent, utility model or design. (DIN ISO 16016)